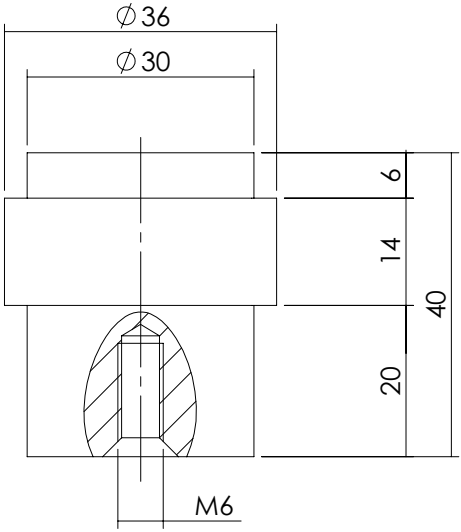
∅36
∅30
6
14
40
20
M6

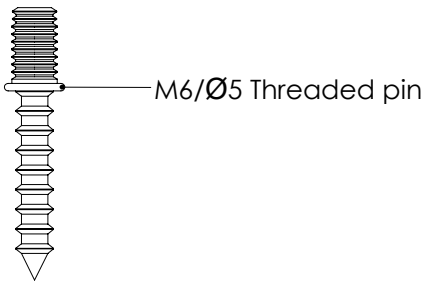
M6/Ø5 Threaded pin

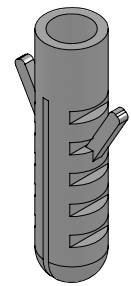

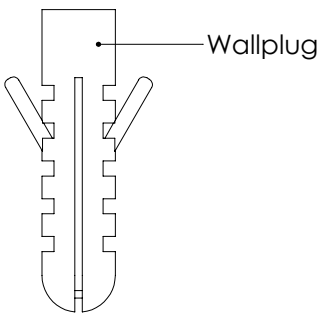
Wallplug